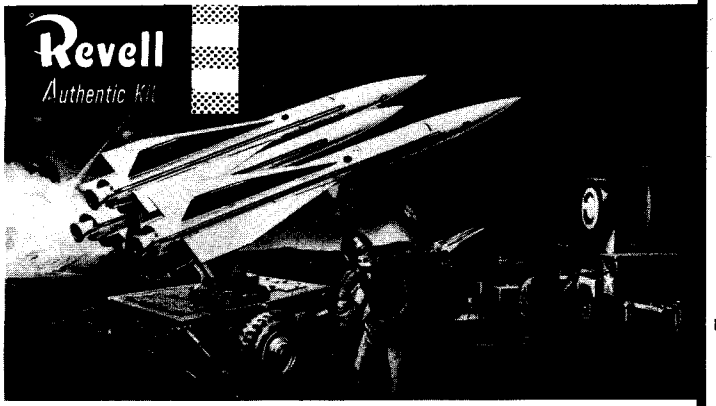

ASSEMBLY INSTRUCTIONS FOR YOUR

HAWK

SOME INTERESTING FACTS ABOUT YOUR "HAWK"

Designed to be used primarily against low-flying aircraft, the Hawk is employed by both the Army and Marine Corps. The missile is carried on a launcher which can fire three missiles in rapid succession and which is highly mobile.

The Hawk is a two-stage, solid fueled rocket, 17 feet long and 1.2 feet in diameter. It has a range of 22 miles and a special radar system which makes it possible for the missile to distinguish between stationary and moving objects. This guidance system also enables the Hawk to seek out and destroy fast-moving targets even at tree-top level.

A Hawk battery consists of 36 missiles and requires about 40 acres of ground for safe deployment. These missiles will be used to supplement Nike installations and have already been installed in the several key positions on the East Coast of the United States. This highly mobile system is capable of being transported with a minimum number of vehicles on the highway or by helicopter and conventional aircraft.

The success of this missile is the result of industry-wide cooperation of several of the nation's largest missile and rocket manufacturers. Northrop Aircraft, Inc. is responsible for the airframe and ground support equipment, Raytheon Manufacturing Company developed the guidance equipment, and Aerojet manufactures the rocket motors.

1

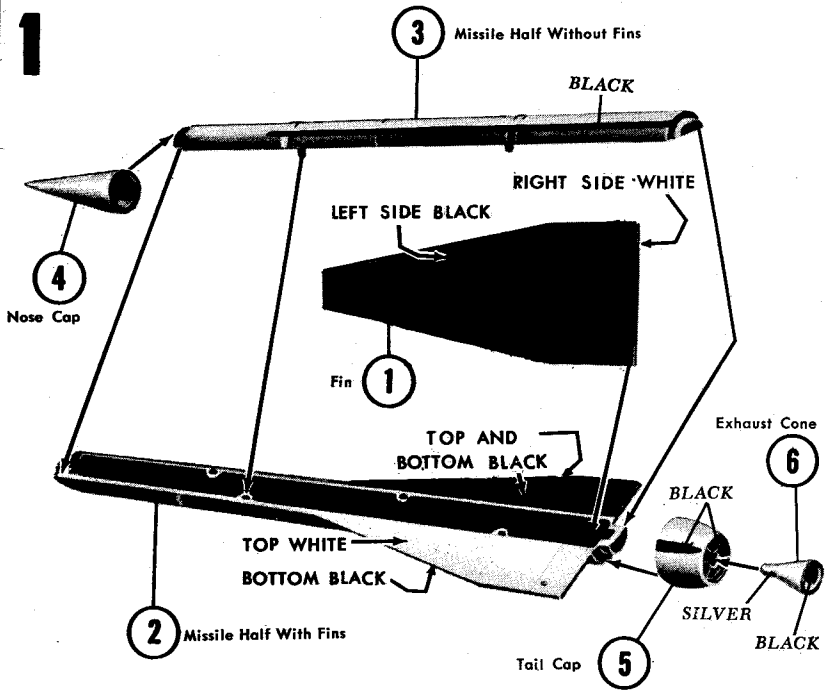

PAINT THE DETAILS AS SHOWN.

A. Cement **Part 1** to **Parts 2** and **3**, as shown. Cement **Parts 2** and **3** together.

B. Cement **Parts 4** and **5** to **Parts 2** and **3**. Cement **Part 6** to **Part 5**. Assemble the remaining Missiles in the same way and set aside to dry.

PAINT THE DETAILS AND APPLY DECALS, AS SHOWN.

A. Cement **Part 7** to **Part 8**. Cement **Parts 9** and **10** to **Part 8**, as shown. Cement **Part 11** to **Part 8**.

B. Insert, **do not cement, Part 12** through the hole in **Part 13**. Now carefully cement **Part 14** to **Part 12**. **Do not let cement touch Part 13**. Now cement **Part 13** into place, as shown.

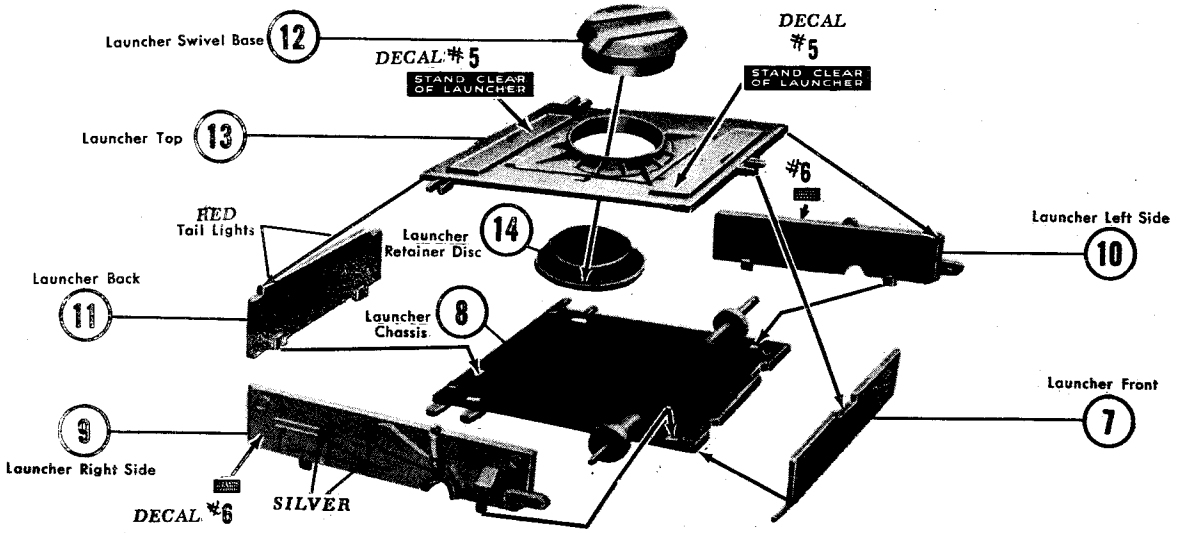

PLEASE FILL IN COUPON BELOW IN INK

FROM:

Revell INC.

4223 GLENCOE AVE.
VENICE
CALIFORNIA

YOUR NAME
(Please Print)_____

STREET ADDRESS_____

CITY_____ ZONE_____ STATE_____

H-1817 CONTENTS — MERCHANDISE. POSTMASTER: This parcel may be opened for postal inspection if necessary. Return postage guaranteed.

PARTS LIST FOR YOUR HAWK MISSILE BATTERY

1. Fin
2. Missile Half With Fins
3. Missile Half Without Fins
4. Nose Cap
5. Tail Cap
6. Exhaust Cone
7. Launcher Front
8. Launcher Chassis
9. Launcher Right Side
10. Launcher Left Side
11. Launcher Back
12. Launcher Swivel Base
13. Launcher Top
14. Launcher Retainer Disc
15. Missile "I" Beam Support
16. Missile Rear Support
17. Missile Support Tubing
18. Missile Forward Support
19. Missile Cooler
20. Right Side Support Frame, Top
21. Right Side Support Frame, Bottom
22. Side Support Cylinders (2)
23. Side Support Pistons (2)
24. Support Discs (3)
25. Left Side Support Frame, Top
26. Left Side Support Frame, Bottom
27. Launcher Tow Hook
28. Front Support Frame Cylinder Cap
29. Front Support Frame
30. Front Support Cylinder
31. Front Support Piston
32. Pivot Arm Piston
33. Pivot Arm Cylinder
34. Right Pivot Arm
35. Left Pivot Arm
36. Lights (2)
37. Tires (4)
38. Launcher Wheels (2)
39. Right Generator Instrument Panel
40. Left Generator Instrument Panel
41. Generator Housing
42. Right Generator Housing Door
43. Left Generator Housing Door
44. Radar Chassis
45. Swivel Housing
46. Swivel Housing Box
47. Swivel Housing Retainer Disc
48. Right Radar Instrument Panel
49. Left Radar Instrument Panel
50. Forward Radar Support Stowage Rack
51. Rear Radar Support Stowage Rack
52. Radar Springs (2)
53. Axle and Brake Drums
54. Radar Tracking Shaft
55. Bottom Radar Tracking Bearing
56. Top Radar Tracking Bearing
57. Radar Reflector
58. Left Radar Tracking Shield
59. Right Radar Tracking Shield
60. Radar Wheels
61. Radar Supports (4)
62. Kneeling Figure
63. Shadow Bases (4)
64. Figure With Hands Raised
65. Figure With Phone
66. Figure With Hand on Hip
67. Decals

SHOULD ANY PARTS BE MISSING, CIRCLE MISSING PARTS AND SEND IN PARTS LIST AND COUPON TO: DEPT. X, REVELL, INC., 4223 GLENCOE AVENUE, VENICE, CALIFORNIA

3

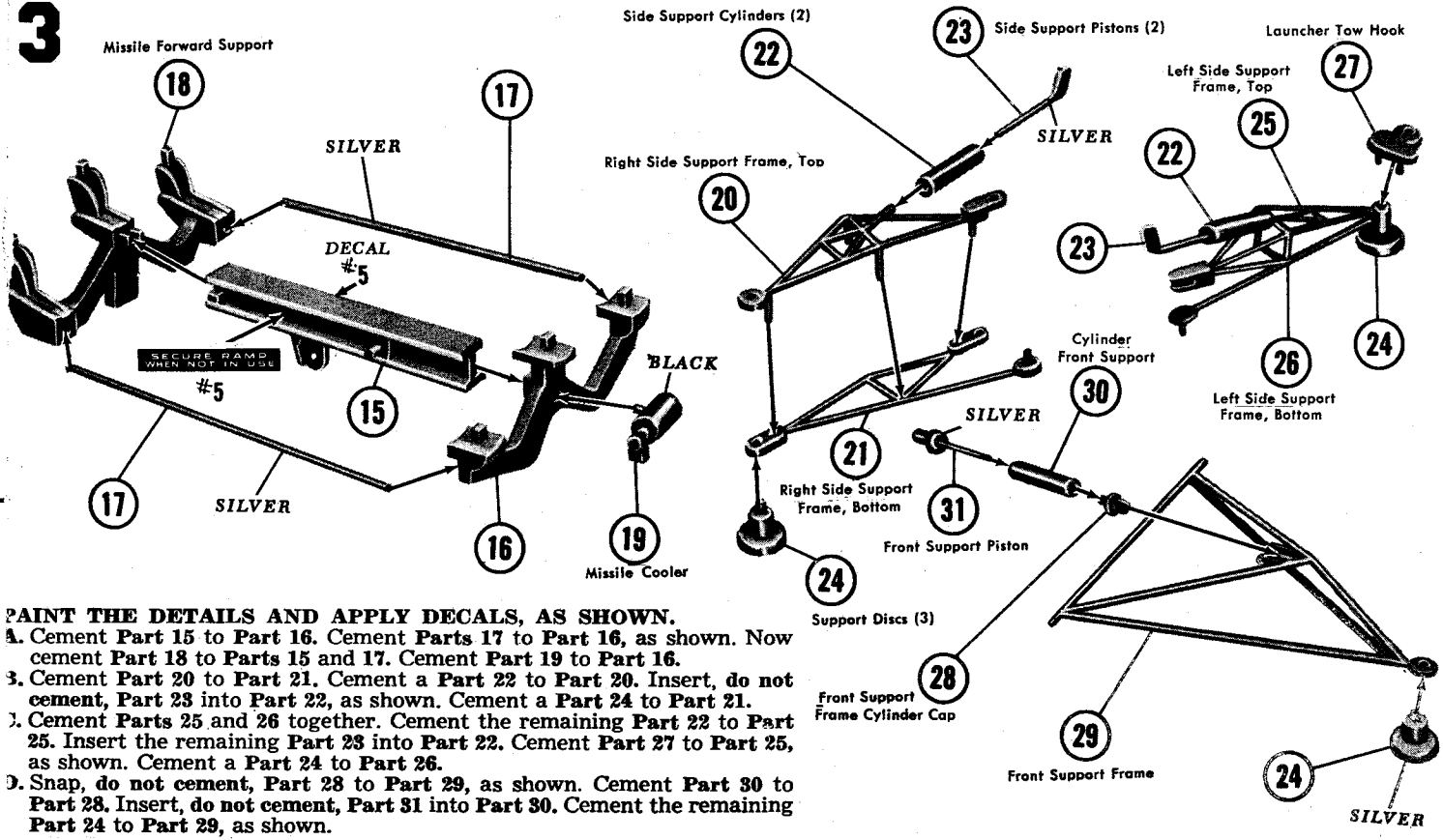

PAINT THE DETAILS AND APPLY DECALS, AS SHOWN.

A. Cement **Part 15** to **Part 16.** Cement **Parts 17** to **Part 16,** as shown. Now cement **Part 18** to **Parts 15** and **17.** Cement **Part 19** to **Part 16.**

B. Cement **Part 20** to **Part 21.** Cement a **Part 22** to **Part 20.** Insert, **do not cement, Part 23** into **Part 22,** as shown. Cement a **Part 24** to **Part 21.**

C. Cement **Parts 25** and **26** together. Cement the remaining **Part 22** to **Part 25.** Insert the remaining **Part 23** into **Part 22.** Cement **Part 27** to **Part 25,** as shown. Cement a **Part 24** to **Part 26.**

D. Snap, **do not cement, Part 28** to **Part 29,** as shown. Cement **Part 30** to **Part 28.** Insert, **do not cement, Part 31** into **Part 30.** Cement the remaining **Part 24** to **Part 29,** as shown.

4

PAINT THE DETAILS AND APPLY DECALS, AS SHOWN.

A. Snap, **do not cement,** Part 32 to the Launcher, as shown. Insert, **do not cement,** the other end of **Part 32** into **Part 33.** Locate, **do not cement, Part 33** to **Parts 34** and **35,** as shown. Now cement **Parts 34** and **35** to **Part 12,** as shown.

B. Cement **Parts 36** into place, as shown. Snap, **do not cement,** two **Parts 37** onto two **Parts 38.** Snap, **do not cement, Parts 38** to the Axles. Finally, snap, **do not cement,** the Launcher Supports to the Chassis, as shown.

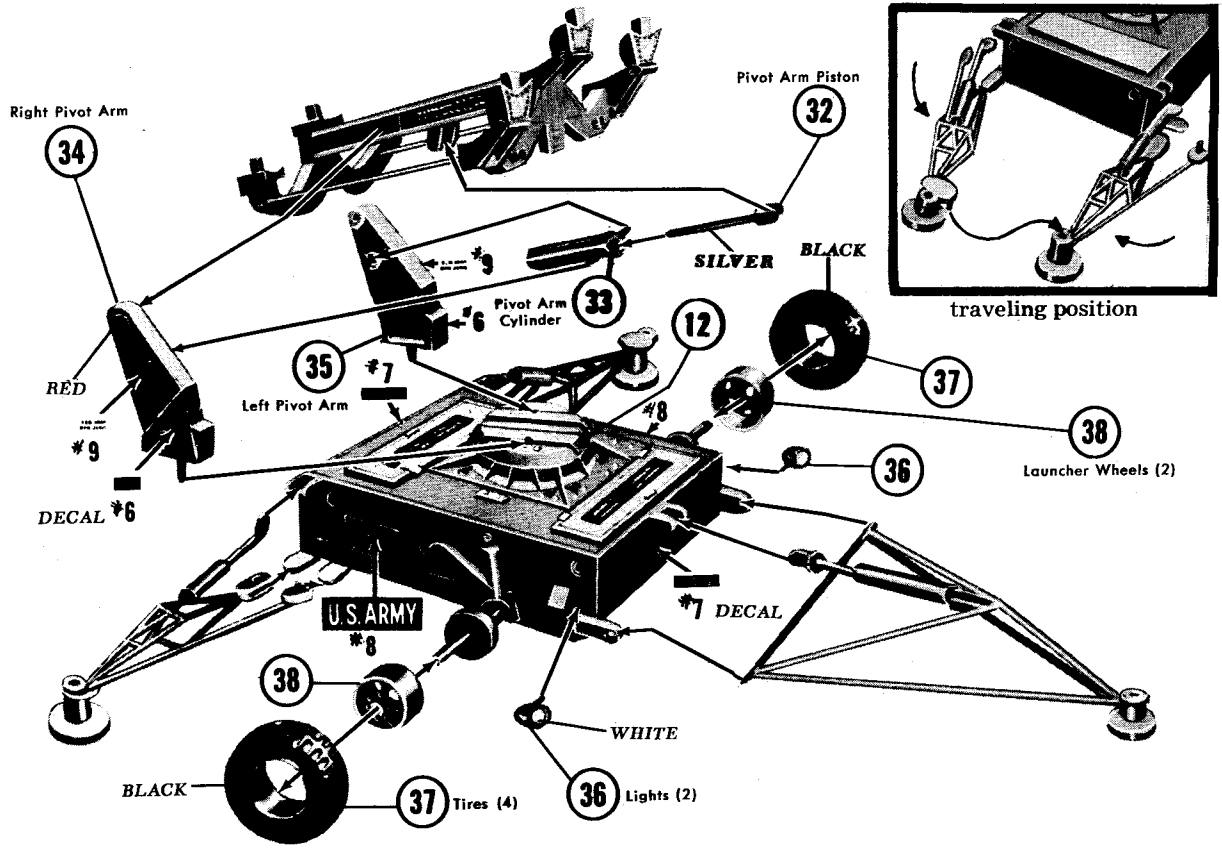

5

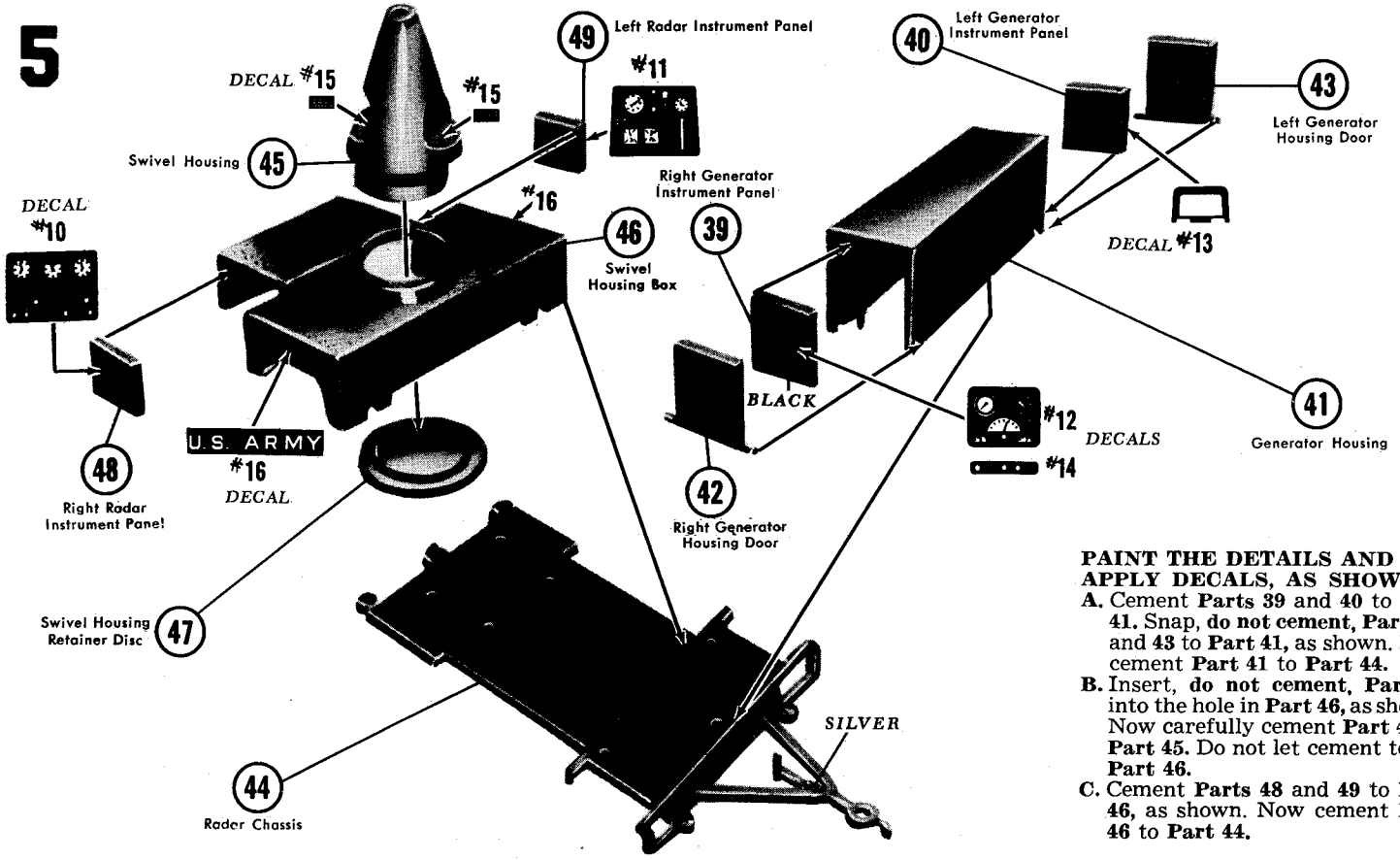

PAINT THE DETAILS AND APPLY DECALS, AS SHOWN.

A. Cement **Parts 39** and **40** to **Part 41.** Snap, **do not cement, Parts 42** and **43** to **Part 41,** as shown. Now cement **Part 41** to **Part 44.**

B. Insert, **do not cement, Part 45** into the hole in **Part 46,** as shown. Now carefully cement **Part 47** to **Part 45.** Do not let cement touch **Part 46.**

C. Cement **Parts 48** and **49** to **Part 46,** as shown. Now cement **Part 46** to **Part 44.**

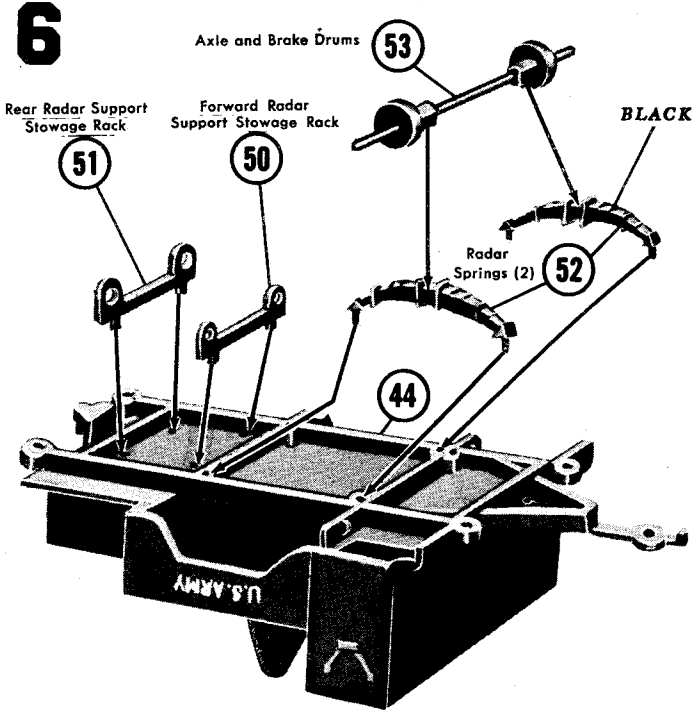

PAINT THE DETAILS, AS SHOWN.

A. Cement **Parts 50, 51** and **52** to the bottom of **Part 44,** as shown. Now cement **Part 53** to **Parts 52.**

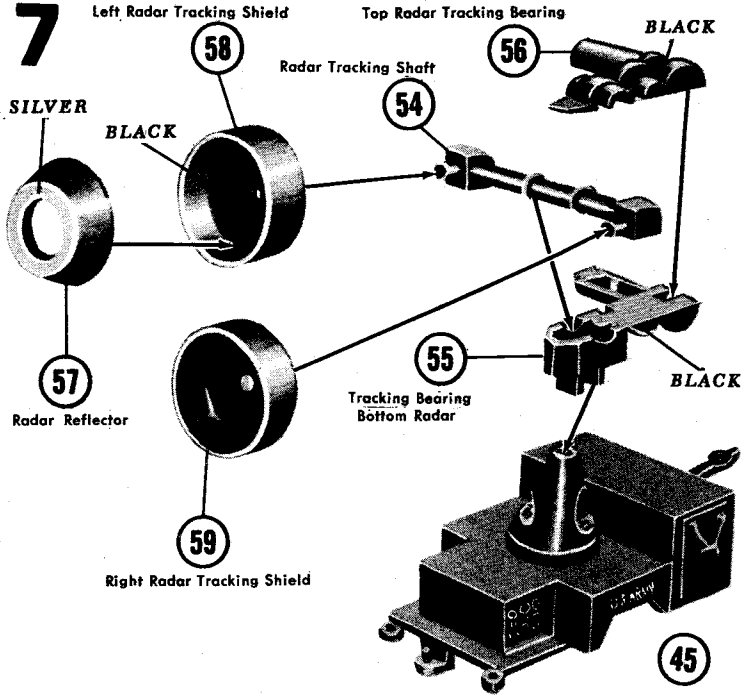

PAINT THE DETAILS AS SHOWN.

A. Place, **do not cement, Part 54** on **Part 55,** as shown. Cement **Part 56** to **Part 55.** Do not let cement touch **Part 54.**

B. Cement **Part 57** to **Part 58.** Cement **Parts 58** and **59** to **Part 54.** Now cement **Part 55** to **Part 45.**

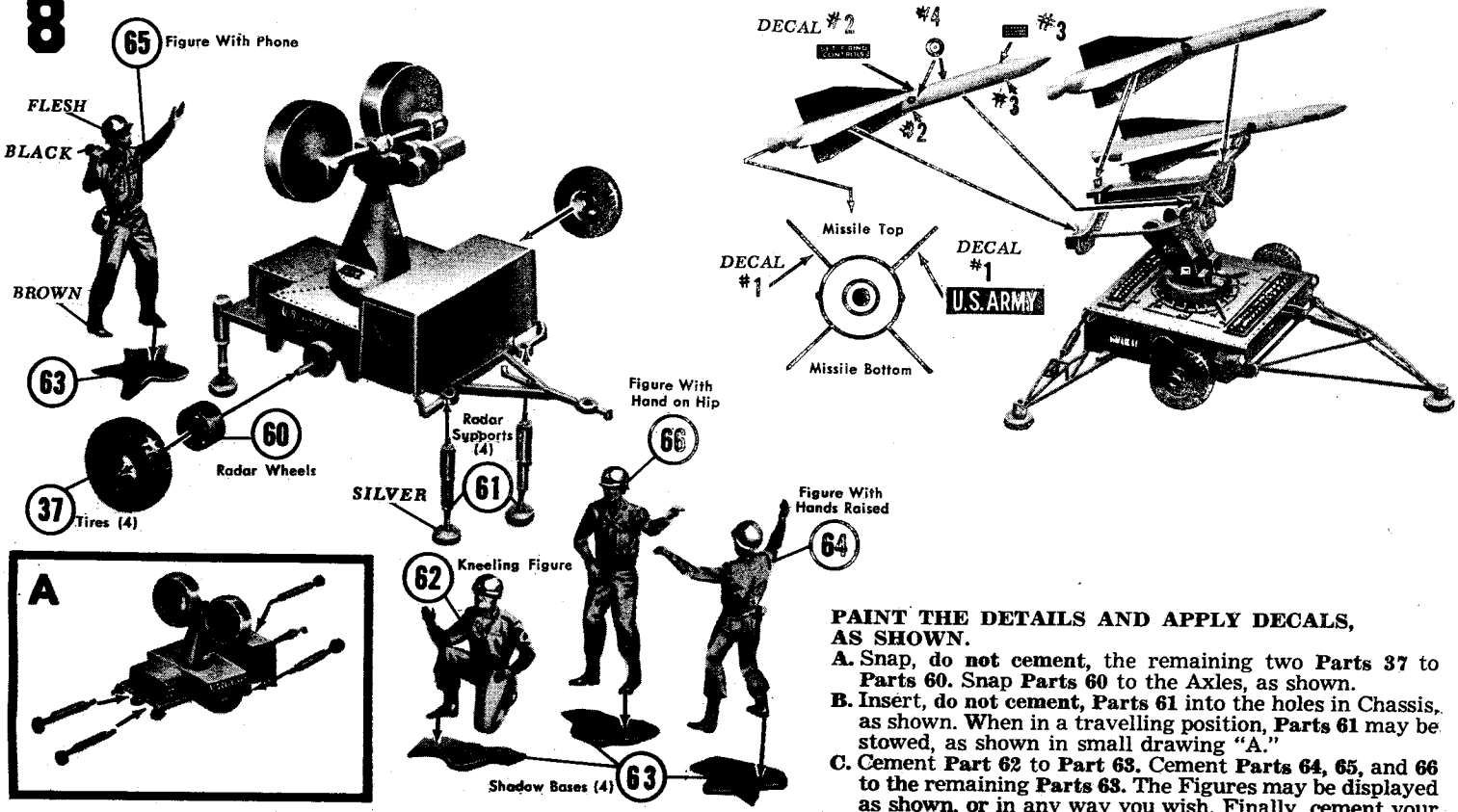

PAINT THE DETAILS AND APPLY DECALS, AS SHOWN.

A. Snap, **do not cement,** the remaining two **Parts 37** to **Parts 60.** Snap **Parts 60** to the Axles, as shown.

B. Insert, **do not cement, Parts 61** into the holes in Chassis, as shown. When in a travelling position, **Parts 61** may be stowed, as shown in small drawing "A."

C. Cement **Part 62** to **Part 63.** Cement **Parts 64, 65,** and **66** to the remaining **Parts 63.** The Figures may be displayed as shown, or in any way you wish. Finally, cement your Hawk Missiles to the Launcher, as shown.

COPYRIGHT 1958 BY REVELL, INC., VENICE, CALIF.

H-1817

LITHO IN U.S.A.

Look! OVER 120 MODELS YOU CAN BUILD AND COLLECT!

missiles! rockets! ships! planes!
combat models! gift sets! animals!

mail this coupon and 10¢ for your
NEW FULL COLOR COLLECTOR'S
CATALOG OF REVELL HOBBY KITS

24 PAGES! FULL COLOR!

- includes 46 brand new models never shown before!
- complete facts and full-color photos for over 125 Revell kits and sets!

REVELL, INC., Dept KC-8, 4223 Glencoe Avenue, Venice, California
Please rush me by return mail the new 24-page, full-color 1958-59 REVELL HOBBY KIT CATALOG. I am enclosing 10¢ in stamps or coin.

NAME (Please print)_____

ADDRESS_____

CITY_____ ZONE_____

STATE_____

CONTENTS: MERCHANDISE—Postmaster: This parcel may be opened for postal inspection if necessary. Return postage guaranteed.

Cut Along Line

ENJOY ALL THE ACTION OF REAL RAILROADING with

REVELL H-O gauge ready-to-run ELECTRIC TRAINS

see why it's more fun to go Revell H-O...

EVERYTHING YOU COULD WANT FOR THRILL-PACKED RAILROADING...

- REAL-ACTION TRAIN SETS

- POWERFUL ENGINES WITH REAL GEAR DRIVE

- COLORFUL FREIGHT CARS

- DOZENS OF AUTHENTIC RAILROADING ACCESSORIES TO MAKE REVELL THE MOST COMPLETE H-O LINE.

see why it's more fun to go Revell H-O...

Cut Along Dotted Line

send for the NEW REVELL H-O TRAIN CATALOG

REVELL, INC., Dept. H-1817
4223 Glencoe Ave.
Venice, California

Please rush me a complete full-color CATALOG OF REVELL H-O READY-TO-RUN ELECTRIC TRAINS. I enclose 10¢ in stamps or coin.

Name
(please print)_____

Address_____

City_____ Zone___ State_____

CONTENTS: MERCHANDISE—POSTMASTER: THIS PARCEL MAY BE OPENED FOR POSTAL INSPECTION IF NECESSARY. RETURN POSTAGE GUARANTEED.